MAYOR AND COUNCIL AGENDA

NO. 12 DEPT.: Legal / DATE: July 29, 2004

ACTION: Adoption of ordinance to grant zoning text amendment application TXT2004-00210 to amend the provisions of the Zoning and Planning Ordinance of the Rockville City Code pertaining to signs by amending Sections 25-1, 25-4 and Sections 25-456 through 25-471, by adding new sections 25-472 and 25-473, and by adding a new Division 5 to Article II pertaining to the Sign Review Board, to confirm and clarify the opportunities for noncommercial speech through signage; to provide and amend the standards for the erection, maintenance, and removal of signs; to confirm current administrative practice in administering the provisions of the sign regulations; to amend the provisions pertaining to the application for sign permits, issuance of sign permits, and appeals; to clarify the purposes of the sign provisions; to clarify and amend the provisions pertaining to election signs; to add, delete, and amend certain definitions; to clarify certain other provisions of the sign regulations; to delete obsolete provisions; to clarify the purpose of the sign regulations; to clarify the Mayor and Council's intent that any provision(s) of the sign regulations determined to be invalid shall be severable from the remainder of the sign regulations; and to generally amend the provisions pertaining to signs.

ACTION STATUS:

FOR THE MEETING OF: 8/02/04

INTRODUCED	7/26/04
PUB. HEARING	7/12/04
INSTRUCTIONS	7/26/04
APPROVED	
EFFECTIVE	

ROCKVILLE CITY CODE,

CHAPTER 25
SECTION

☐ CONSENT AGENDA

RECOMMENDATION: Adopt the attached ordinance to grant Text Amendment Application TXT 2004-00210.

IMPACT: ☐ Environmental ☐ Fiscal ☐ Neighborhood ☐ Other:

BACKGROUND:

On May 24, 2004, the Mayor and Council authorized the filing of text amendment application TXT2004-00210 on its behalf. The purpose of the text amendment application is to preclude frivolous challenges to the ordinance alleging an unconstitutional restraint on free speech by amending and modifying the sign provisions to codify current practices pertaining to the interpretation and enforcement of the sign regulations, to make clear that the regulations do not unconstitutionally restrain or restrict speech, and to make clear that it is the City's intent to provide ample and constitutionally adequate opportunities to engage in commercial and noncommercial speech while protecting the community against the deleterious effects of unregulated signage. The text amendment application also takes the opportunity to make certain other amendments to the sign regulations. Subsequent to the filing of the initial text amendment application, an errata sheet was filed amending the application.

A full discussion of the proposed text amendment is contained in the Staff Report to the Planning Commission. In summary, the proposed text amendment:

- Establishes time frames for acting on applications for sign permits and appeals from denials.

- Clarifies the requirements for a sign permit application and the standards for issuing a sign permit.

- Confirms and clarifies that the sign provisions do not constitute an impermissible content-based regulation of speech by eliminating, to the extent practicable, references to sign function.

- Codifies and confirms current administrative practice/interpretation that affords opportunities for noncommercial speech by
    - Specifically allowing noncommercial messages where commercial messages are otherwise permitted.
    - Specifically providing that prohibited off-premises signs do not include signs with noncommercial messages.
    - Providing for additional temporary signage for noncommercial speech.
    - Retaining the current exemption for interior signs and window signs not exceeding 20% of the window area.

- Codifies and confirms current administrative practice/interpretation by specifically allowing
    - Yard sale signs
    - Decorative flags and rigid "banners" on lampposts (usually seasonal or holiday related)
    - Signs located on recreational facilities not intended to be readable from a public way.

- Codifies and confirms current administrative practice/interpretation allowing noncommercial speech on residential property by specifically allowing noncommercial temporary signs not to exceed an aggregate of 12 square feet at any one time. There is no duration limit or permit requirement for such signs. Noncommercial temporary signs on residential property may be used for
    - Yard sale signs (defined as being noncommercial)
    - Election signs
    - Expressing a political or issue viewpoint
    - Expressing any other noncommercial message

- Expands opportunities for noncommercial speech on non-residential property by specifically allowing noncommercial temporary signs not to exceed an aggregate if 32 square feet at any one time. Such signs may not be erected on nonresidential properties for more than 60 consecutive days or for a total of 60 days during any calendar year. Such signs may be used for

Election signs
Expressing political or issue viewpoint
Expressing any other noncommercial message

- Expands opportunities to advocate candidates and issues to be voted on at an election in recognition of the high level of protection under the First Amendment generally afforded to election signs.
    - Changes the term "political sign" to "election sign" and modifies the definition so as to more clearly distinguish between signs that advocate a candidate or issue to be voted on at an election from other expressions of political viewpoint.
    - Allows election signs to be erected as temporary noncommercial signs, subject to the height, area, location, maintenance, and duration requirements of such signs in the respective zone.
    - Eliminates the current restrictions on erecting such signs prior to 30 days before an election, consistent with the growing trend of municipal governments (including Montgomery County) to place no restrictions on how early such signs may be erected. Such signs, however, are still subject to height, location, maintenance, and area requirements and must be removed within 7 days after the election.
        - The requirement that election signs be removed within 7 days after the election is consistent with the requirement that all signs pertaining to an event be removed within 7 days following the event.
        - Administratively, the requirement will be used to prompt persons and entities to remove signs that they have forgotten or otherwise neglected to remove.
        - Any person or entity who represents that the sign pertains to some future election or that the person or entity desires to continue to express the message contained on the sign, will be allowed to retain the sign subject to the applicable area, size, height, location, time, and maintenance requirements applicable to temporary noncommercial signs in the respective zones.
    - Increases the current aggregate election signage allowed (as noncommercial temporary signs) in residential zones from 9 square feet to 12 square feet. Retains the current aggregate election signage allowed (as noncommercial temporary signs) in other zones at 32 square feet.

- Confirms and codifies the current administrative practice/interpretation pertaining to signs on public property or within the public right-of-way
    - Retains the current prohibition against placing signs on public property or within the public right-of-way except as directed by the City Manager.
    - Adds a new provision describing those signs that the City Manager may direct or authorize to be placed on public property or within the public right-of-way, consistent with current practice.
        - Signs that comply with the provisions of the Manual on Uniform Traffic Control Devices or otherwise provide directional or other noncommercial public service information.
        - Signs pertaining to a governmental or public purpose.
        - Signs pertaining to the use, maintenance, and/or operation of public property or the public right-of-way and/or pertaining to any events or activities lawfully conducted on the property or right-of-way.
        - Signs pertaining to the closure or partial closure of a road or other public right-of-way.
        - Such other signs deemed to be in the public interest.

- Clarifies and expands the public purposes of the sign provisions.

- Amends, adds, and deletes various definitions to clarify and support the purpose and intent of the sign provisions.

- Amends and clarifies certain other provisions of the sign regulations.

- Amends the severability provision of the zoning ordinance to make clear that if any provision of the sign regulations is found to be unconstitutional, it is the intent of the Mayor and Council that the remaining regulations remain in full force and effect.

- Continues to protect the community from the blight of billboards by adding a definition of off-premises signs. (Such definition excludes noncommercial speech).

- Continues to protect the community from the clutter, distraction, and other adverse effects of unregulated signs by
    - Establishing specific construction and maintenance standards for signs.
    - Defining and providing for the removal of abandoned signs.
    - Providing for the removal of signs pertaining to a particular event, activity, or purpose within 7 days of the conclusion of the event, activity, or purpose to which it pertains.
    - Retaining, and clarifying where appropriate, the existing size, height, location, construction, design, illumination, and permitting requirements for signs.

- Continues to allow the signage currently permitted. The proposed text amendment allows for the erection of the same signs currently allowed, with the following limited exceptions:
    - Signs showing time, date, and weather are no longer permitted as an exception to the prohibition of flashing signs. It is believed that with the advent of cell phones and PDAs this exception is no longer needed to provide such information.
    - The provision permitting changeable messages for shopping malls or arcades having at least one hundred (100,000) square feet of gross floor area and having at least ten (10) separate uses not visible from adjoining streets has been deleted, as there are no such uses in the City.
    - Off-site advertising signs are no longer permitted for subdivisions to be consistent with the prohibition of other off-premises signs. Most of construction in the City is in-fill construction. Where subdivisions are constructed available on-site signage is deemed to be sufficient.

- Prohibits signs "with words, scenes, or graphics of an obscene, indecent, or prurient character which offend public morals or decency.

RECOMMENDATION OF THE PLANNING COMMISSION:

The Planning Commission considered the proposed text amendment at its meeting of June 9, 2004. Commissioner Holtz moved, seconded by Commissioner Ostell to recommend approval to the Mayor and Council of Text Amendment Application TXT2004-00210. The motion passed on a vote of 5-1 with Commissioner Britton voting nay. Commissioner Britton stated that he is not against the text amendment, but the motion did not have the right caveat in it pertaining to time limits on election signs.

OTHER REVIEWS:

The Board of Appeals has by resolution and in a memorandum to the Planning Commission expressed its approval of the proposed time constraints. The proposed text amendment was also reviewed by the Board of Elections Supervisors and the Sign Review Board.

PUBLIC HEARING: A public hearing on Text Amendment Application TXT2004-00210 was held by the Mayor and Council on July 12, 2004.

INTRODUCTION OF ORDINANCE:

The attached ordinance was introduced by the Mayor and Council on July 26, 2004. The ordinance as introduced modifies the proposed text amendment as follows:

- Modifies the definition of election signs to define it as a temporary sign and to exclude permanent signs.
- Deletes the definition of roof sign as that term is not used in the regulations.
- Change the term "traffic control device sign" to "traffic control sign."
- In the exemption for signs on recreational facilities on parcels of 5 acres or more, changes the phrase "not visible to the traveling public" to "not intended to be readable from a public way."
- Modifies sign construction, design and maintenance requirements to make clear that signs must comply with the existing and future building and electrical codes applicable in the City.
- Deletes the word "City" before public property as unnecessary.
- Makes certain grammatical changes
- Clarifies the language of the requirement that signs pertaining to an event, activity, or purpose of limited time or duration must be removed within 7 days following the conclusion of the event, activity, or purpose to which they pertain.
- Provides for the consistent use of the term "temporary noncommercial sign" [rather than "noncommercial temporary sign"].
- Deletes the provision expressly allowing election signs to remain if a general election follows a primary election within 75 days since general elections are no longer held within 75 days of primary elections.
- Adds a provision stating that nothing precludes the usage at any time of permitted permanent signage to advocate a candidate or issue to be voted on in an election.
- Modifies the provisions pertaining to signs on public property or within the public right-of-way to authorize the City Manager to designate certain areas for community event signs.
- Clarifies that noncommercial signs are permitted in lieu of commercial signs.
- Modifies the provision pertaining to hearings by the Board of Appeals on appeals from decisions of the Sign Review Board by providing that the Board of Appeals shall hold such hearing at the Board's next scheduled meeting if practical, but in no event later than 45 days from the date of the filing of the appeal, provided that a different hearing date may be set with the consent of the aggrieved party. This change is consistent with the request of the Board of Appeals.
- Further clarifies the severability provisions and the intent of the Mayor and Council that if any provision of the sign regulations is invalidated, all remaining provisions remain in full force and effect.

PREPARED BY:

Sondra Harans Block

Sondra Harans Block, Assistant City Attorney

Date July 29, 2004

LIST OF ATTACHMENTS:

Proposed Ordinance

Ordinance No. _____ ORDINANCE: To Grant Text Amendment Application No. TXT2004-00210, as amended, Mayor and Council of Rockville, Applicant, amending the provisions of the Zoning and Planning Ordinance of the Rockville City Code by amending Sections 25-1, 25-4 and Sections 25-456 through 25-471 and by adding new Sections 25-472 and 25-473 and a new Division 5 to Article II pertaining to signs, to confirm and clarify the opportunities for noncommercial speech through signage, to provide and amend the standards for erection, maintenance, and removal of signs; to confirm current administrative practice in administering the provisions of the sign regulations; to amend the provisions pertaining to the application for sign permits, issuance of sign permits, and appeals; to clarify the purposes of the sign provisions, to clarify and amend the provisions pertaining to election signs; to add, delete, and amend certain definitions; to clarify certain other provisions of the sign regulations; to clarify the Mayor and Council's intent that any provision(s) of the sign regulations determined to be invalid shall be severable from the remainder of the sign regulations; and to generally amend the provisions pertaining to signs.

WHEREAS, on March 24, 2004 the Mayor and Council authorized the filing on its behalf of Zoning Text Amendment application TXT2004-00210 to amend the provisions of the Zoning and Planning Ordinance pertaining to signs; and

WHEREAS, the Board of Appeals reviewed the proposed text amendment at its June 5, 2004 meeting and recommended approval, as set forth in its memorandum dated June 8, 2004 and Resolution dated June 5, 2004; and

WHEREAS, the Planning Commission reviewed the proposed text amendment application at its June 9, 2004, meeting and recommended approval, with modifications, as set forth in a memorandum dated July 9, 2004; and

WHEREAS, pursuant to Article 66B of the Annotated Code of Maryland, the Mayor and Council of Rockville gave notice that a hearing on said application would be held by the Mayor and Council in the Council Chambers at Rockville City Hall on July 12, 2004, at 7:00 p.m. or as soon thereafter as it may be heard; and

WHEREAS, on July 12, 2004, said application came on for hearing at the time and place provided for in said advertisement; and

WHEREAS, the Mayor and Council has considered the text amendment application, and the entire file pertaining thereto; and

WHEREAS, the Mayor and Council has determined the need to update and revise the portion of the Zoning and Planning Ordinance relative to signs; and

WHEREAS, the Mayor and Council wishes to ensure that the Zoning and Planning Ordnance as it relates to signs is in compliance with all constitutional and other legal requirements; and

WHEREAS, the Mayor and Council wishes to prohibit certain sign types; and

WHEREAS, the Mayor and Council finds that certain types of signs, including but not limited to large signs, off-premises signs, moving signs, and flashing signs, create a safety hazard by distracting and/or confusing motorists, pedestrians and others; and

WHEREAS, the Mayor and Council wishes to protect the safety or motorists, pedestrians, and others from distraction and/or confusion caused by signs; and

WHEREAS, the Mayor and Council finds that some signs, including but not limited to large signs, off-premises signs, moving signs, and flashing signs, detract from the aesthetic beauty of the landscape and/or community; and

WHEREAS, the Mayor and Council finds and determines that aesthetics is a valid basis for zoning, and the regulation of the size of signs and the prohibition of certain types of signs can be based upon aesthetic grounds alone as promoting the general welfare; and

WHEREAS, the Mayor and Council wishes to preserve the aesthetic beauty of the City of Rockville so as to advance and protect the public welfare; and

WHEREAS, the Mayor and Council finds and determines that the City's Zoning and Planning Ordinance and its signage regulations are intended to maintain and improve the quality of life for all citizens of the City, and to implement the City's Master Plan; and

WHEREAS, the Mayor and Council desires to delete or amend certain language and provisions of the existing sign regulations which are obsolete, and/or which have not been enforced, and/or which are not enforceable; and/or which are superfluous to the policies, objective, and goals of the City's Master Plan; and

WHEREAS, the Mayor and Council finds and determines that the City has allowed noncommercial speech to appear wherever commercial speech appears; the Mayor and Council desires to codify that practice, and thereby state the Mayor and Council's intent that the sign regulations not impermissibly favor commercial speech over noncommercial speech, through the specific inclusion of a substitution clause that

expressly allows noncommercial messages to be substituted for commercial messages; and

WHEREAS, the Mayor and Council finds and determines that it is necessary to regulate the size, location, height, construction, maintenance, removal, and lighting of signs so as to protect the public health, safety, and welfare, and to limit visual clutter and/or the distraction and confusion that can be caused by signs, while affording a sufficient opportunity for information to be conveyed by signage in a reasonable and appropriate manner; and

WHEREAS, the Mayor and Council finds and determines that this ordinance will lessen hazardous situations, as well as confusion and visual clutter otherwise caused by the proliferation, improper placement, excessive height, excessive size, and distracting characteristics of signs which compete for the attention of pedestrian and vehicular traffic; and

WHEREAS, the Mayor and Council finds and determines that this ordinance will enhance the attractiveness and economic well-being of the City as a place to live, visit, and conduct business; and

WHEREAS, the Mayor and Council finds and determines that anything beside the road which tends to distract the driver of a motor vehicle directly affects traffic safety, and that signs, which divert the attention of the driver and occupants of motor vehicles from the roadway to objects away from it, may reasonably be found to increase the danger of accidents; and

WHEREAS, the Mayor and Council recognizes that outdoor signs serve as a form of advertisement designed to be seen without the exercise of choice or volition on the part

of the observer, unlike other forms of advertising that are ordinarily seen as a matter of choice on the part of the observer; and

WHEREAS, the Mayor and Council finds and determines that the business of outdoor advertising in the form of off-premises signs, commonly known as billboards, is not compatible with adjacent areas and is not an approved land use within the City or any of its zoning districts; and

WHEREAS, the Mayor and Council finds and determines that off-premises signs are public nuisances given their adverse impact on both traffic safety and aesthetics; and

WHEREAS, the Mayor and Council recognizes that on-premises business signs are considered to be part of the business itself, as distinguished from off-premises outdoor advertising signs, and finds and determines that the unique nature of outdoor advertising and the nuisances fostered by off-premises signs justify the separate classification of such structures for the purposes of governmental regulation and restriction; and

WHEREAS, the Mayor and Council finds and determines that it is appropriate to separately classify off-premises and on-premises commercial advertising signs in taking steps to minimize visual pollution, traffic hazards, and distractions and/or confusion to the motoring public; and

WHEREAS, the Mayor and Council finds and determines that the continued prohibition of off-premises signs in all zones will continue to foster the overall improvement to the aesthetic and visual appearance of the City, increase the visibility, readability and/or effectiveness of on-premises signs by diminishing the visual clutter presented by off-premises signs, enhance the City as an attractive place to live and/or

work, reduce blighting influences, and improve traffic safety by reducing driver distractions; and

WHEREAS, the Mayor and Council finds and determines that the prohibition of certain signs (including but not limited to portable signs, flashing or blinking signs, off-premises signs, and obscene signs) reasonably advances the governmental goals of protecting public health, safety, and welfare and protecting the aesthetic environment of the City; and

WHEREAS, the Mayor and Council wishes to continue to assure that certain signs, including but not limited to portable signs, flashing or blinking signs, off-premises signs, and obscene signs, are effectively prohibited as sign-types within the City; and

WHEREAS, the Mayor and Council finds and determines that there have never been delays in connection with the permitting of signs, and there have never been delays in the City in connection with appeals from adverse permitting decisions involving signs; and

WHEREAS, the Mayor and Council recognizes that frivolous challenges to the provisions of the Zoning and Planning Ordinance regulating signage might be made under the pretext that the City is unconstitutionally restraining free speech, and the Mayor and Council desires to amend and modify the Zoning and Planning ordinance to codify current practice and, to the fullest extent possible, ensure that a prior restraint claim cannot be advanced in good faith against the City's sign regulations; and

WHEREAS, the severability clause contained in the Zoning and Planning Ordinance was adopted with the intent of upholding and sustaining as much of the City's regulations contained therein, including its sign regulations, as possible in the event that

any portion thereof be held invalid or unconstitutional by any court of competent jurisdiction; and

WHEREAS, the Mayor and Council desires that there be an ample record that it intends that each prohibited sign-type continue in effect regardless of the invalidity or unconstitutionality of any, or even all other, provisions of the City's sign regulations (including but not limited to provisions pertaining to sign permits), other code provisions, or other laws, for any reason or reasons whatsoever; and

WHEREAS, the Mayor and Council desires that the prohibition of off-premises signs continue in effect regardless of the invalidity or unconstitutionality of any, or even all other, provisions of the City's sign regulations (including but not limited to provisions pertaining to sign permits), other code provisions, or other laws, for any reason or reasons whatsoever; and

WHEREAS, the Mayor and Council desires that there be an ample record that it intends that the height and size limitations on free-standing and other signs continue in effect regardless of the invalidity or unconstitutionality of any, or even all other, provisions of the City's sign regulations (including but not limited to provisions pertaining to sign permits), other code provisions, or other laws, for any reason or reasons whatsoever; and

WHEREAS, the Mayor and Council desires that there be an ample record that it intends all of the prohibitions and regulations pertaining to signs to remain in full force an effect notwithstanding the invalidity or unconstitutionality of any or all of the permitting requirements for signs contained in Chapter 25; and

WHEREAS, the Mayor and Council finds and determines that the City's sign regulations are concerned with the secondary effects of speech, including but not limited to aesthetics and traffic safety, and are not intended to regulate viewpoints or censor speech; and

WHEREAS, the Mayor and Council has determined that the purpose and intent provisions of the sign regulations contained in the Zoning and Planning Ordinance should be even more detailed than they are now so as to further describe the beneficial aesthetic and other effects of the City's sign regulations, and to reaffirm that the sign regulations are concerned with the secondary effects of speech and are not designed to censor speech or regulate the viewpoint of the speaker; and

WHEREAS, the Mayor and Council finds and determines that vacant property adversely affects the economic vitality and well-being of the City and can be come a blight upon the community; and

WHEREAS, the Mayor and Council finds and determines, consistence with current jurisprudence, that on-premises real estate signs should be specifically allowed given the important and unique function that such signs perform on the premises where they are located and in reducing the number of vacant properties in the City; and

WHEREAS, the Mayor and Council finds and determines that on-premises directional signs should be specifically allowed given the important and unique function they serve by assisting motorist and pedestrian way-finding on site; and

WHEREAS, the Mayor and Council finds and determines that maintaining, preserving, and fostering the residential character of its residential neighborhoods is essential to the well-being and quality of life of the residents of the City, and further finds

and determines that an unregulated proliferation of signs in residential neighborhoods can create visual blight and undermine the residential character of neighborhoods and thereby adversely affect the well-being and quality of life of the residents of the City; and

WHEREAS, the Mayor and Council finds and determines, consistence with current jurisprudence, that signs allowing residential homeowners to freely express a particular point of view on their own property may be uniquely valuable and should be reasonably accommodated, consistent with the governmental goal of maintaining, preserving, and fostering the residential character of neighborhoods in the City; and

WHEREAS, the Mayor and Council finds and determines that commercial property owners have greater opportunities for expressing a viewpoint through permitted permanent signage than do residential property owners, and that, therefore, it is warranted and appropriate to provide time restrictions on temporary noncommercial signage on commercial properties so as to serve the governmental interest in preserving the aesthetic environment of the City and in promoting traffic safety; and

WHEREAS, the Mayor and Council recognizes the right of persons and entities to express themselves through the flying of the flag of the United States of America and the flags of other governmental entities, and desires to continue to afford people and entities the opportunity to fly such flags and to associate themselves with the message so displayed by flying a private flag along with such governmental flags; and

WHEREAS, the exemptions, exceptions, and/or special provisions for window signs, real estate signs, directional signs, temporary noncommercial signs, election signs, and certain other sign types are not intended to diminish or lessen the City's interests in aesthetics or traffic safety, but the same are adopted in recognition of the useful functions

and practical needs served by such signage in the City's commerce and/or in the political freedom that must be accorded its citizens to freely express their points of view and political desires; and

WHEREAS, identification and regulation of specific signs by the function served by the sign (e.g. directional signs, real estate signs, and other sign types described by function) are in recognition of the useful functions and practical needs served by such signage and are not intended to prefer any speaker or point of view over another; and

WHEREAS, various signs that serve and function as signage for particular land uses, such as theaters, are allowed some additional features in recognition of the differing or special functions served by those land uses, but not based upon any intent to favor any particular viewpoint or control the subject matter of public discourse; and

WHEREAS, the Mayor and Council finds and determines that prohibiting signs on public property and in the public right-of-way, except as directed or authorized by the City Manager, is necessary to serve the City's interest in aesthetics and traffic safety and to limit interference with, and the increase cost of, maintenance of the public property and the public right-of-way that signs may cause; and

WHEREAS, the Mayor and Council finds and determines that the sign regulations adopted hereby still allow adequate alternative means of communications.

WHEREAS, the Mayor and Council recognizes that its sign regulations may be under-inclusive in their reach to serve the City's interests in aesthetics and traffic safety, while at the same time balancing the interests protected by the First Amendment, and the Mayor and Council may from time to time modify the sign regulations herein so as to

provide additional limitations to further serve the City's interests in aesthetics and/or pedestrian and traffic safety.

WHEREAS, the Mayor and Council having decided that the granting of this application, as amended, in the form set forth below would promote the health, safety and welfare of the citizens of the City of Rockville.

NOW, THEREFORE, BE IT ORDAINED BY THE MAYOR AND COUNCIL OF ROCKVILLE, MARYLAND, that Text Amendment Application No. TXT2004-00210 be, and the same is hereby, granted, as amended, in the form set forth below.

Section 1. That Chapter 25 of the Rockville City Code entitled "Zoning and Planning," Article 1 entitled "In General," Division I entitled "Generally," Section 25-1 entitled "Definitions" and Section 25-4 entitled "Severability" be amended to read as follows:

Article I. In General

Division I. Generally

Sec. 25-1. Definition

The following words, terms and phrases, when used in this chapter, shall have the meanings and ascribed to them in this section:

* * *

Banner means any sign or string of one or more signs, usually made of cloth or other lightweight material, which is used to attract attention, whether or not imprinted with words or characters, including but not limited to balloons and pennants.

Building, community means * * *

* * *

Cemetery means * * *

Chief of Inspection Services means the individual holding the position Chief of Inspection Services within the City's Department of Community Planning and Development Services or such individual's designee.

* * *

Copy means the linguistic or graphic content of a sign.

Firearms means * * *

Flag means any fabric containing distinctive colors, patterns, or symbols, used as an ornamental flag or as a symbol of a government, political subdivision, or other entity.

Flag, ornamental means any fabric or similar material designed to be flown as a flag and containing patterns, drawings or symbols used for decorative purposes and noncommercial in nature.

* * *

Glare means a direct or reflected light source creating a harsh brilliance that causes the observer to squint, shield or avert the eyes.

* * *

Pennant means any series of small flag-like or streamer-like pieces of cloth, plastic, paper or similar material attached in a row to any staff, cord, building, or at only one or two edges, the remainder hanging loosely.

* * *

Sign means any structure, part thereof, or device attached thereto or painted or represented thereon or any material or thing, illuminated or otherwise, which displays or includes any numeral, letter, words, model, banner, pennant, emblem, insignia, device, trademark, logo, graphic, or other representation used [as, or in the nature of, an announcement, advertisement, direction, or designation of any person firm group, organization, place, commodity, product, service, business, profession, enterprise, or industry which is locate upon any land, or any building, in or upon a window, or indoors in such a manner as to attract attention from outside the building], in any manner whatsoever, so as to convey information or attract attention. Sign does not include the flag, emblem, insignia, poster or other display of a nation, state, or political subdivision.

Sign, abandoned means a sign which identifies a business, lessor, service, owner, product, or activity that is no longer located on the premises, or a sign for which no legal owner can be found. "Abandoned sign" also includes any permanent sign not properly maintained or operated for a period of six months or longer, any temporary sign that has deteriorated, and any sign structure that no longer supports the sign for which it was

designed. Permanent signs applicable to a business temporarily suspended because of a change of ownership or management of such business shall not be deemed abandoned unless the property, building, or space remains vacant for a period of six (6) months or more.

[*Sign, advertising* means a building sign which includes any copy and/or graphics relating to any service, product, person, business, place, activity or organization in addition to simple identification, excluding directional information.]

Sign, building means any sign mounted on a wall, window, marquee, fascia, mansard, canopy, or parapet of a building.

Sign, commercial means a sign that references, or directs the attention of the public to, a business, commodity, service, sale or sales event, or other commercial activity. Commercial sign does not include election signs, temporary signs pertaining to fundraising activities for non-profit organizations, or temporary yard sale signs.

Sign, directional means a noncommercial sign that [does not contain advertising information, but includes] contains only [pertinent] information[, including] assisting the flow of vehicular or pedestrian traffic or control of parking.

Sign, election means any temporary sign that advocates the candidacy of any person for an elected position or an issue that is to be voted on in a Federal, State, County, or City election process. Election sign does not include a campaign headquarters sign or other permanent sign.

* * *

[*Sign, identification* means a sign which carries only the name and/or logo or trademark of one (1) business, place, organization, building or person it identifies.]

Sign, monument means a freestanding sign mounted directly and permanently to the ground without a separate supporting structure.

Sign, noncommercial means a sign that is not a commercial sign.

Sign, non-conforming means any sign that does not conform to the provisions of this Chapter, but was placed or constructed in accordance with City ordinances existing at the time of its placement or construction.

Sign, occupant identification means a sign indicating the name and/or profession or address of a person or persons or entity residing on the premises or legally occupying the premises.

Sign, off-premises means a sign that directs attention to a building, product, business, organization, service, entertainment, commodity, accommodations, activity, or institution

that is not located, conducted, sold, rented, produced, manufactured and/or furnished on the same lot as the sign. Off-premises signs include, but are not limited to, signs commonly referred to as "billboards." Off-premises sign does not include election signs or noncommercial signs that comply with all other requirements of this chapter.

Sign, permanent means a sign that is constructed in a manner and of materials that will withstand long-term display and is intended to be displayed for an indefinite period of time.

[*Sign, political* means any sign that advocates the candidacy of any person for Federal, State County or City elected position, whether primary or general election.]

Sign, real estate means a temporary sign advertising the sale, rental, or lease of the real estate upon which the sign is located.

Sign, safety control means a warning, control, OSHA, or other sign required for public safety.

Sign, temporary means a non-permanent sign constructed of durable, semi-durable, or non-durable material not intended to be displayed for an indefinite period.

Sign, traffic control means any sign located on public or private property that is used as a traffic control device and that is described and identified in the Manual on Uniform Traffic Control Devices (MUTCD) and approved by the Federal Highway Administrator as the national standard. A traffic control sign includes those signs that are classified and defined by their function as regulatory signs (that give notice of traffic laws or regulations), warning signs (that give notice of a situation that might not readily be apparent), and guide signs (that show route designations, directions, distances, services, points of interest, and other geographical, recreational, or cultural information.)

Sign, yard sale means any onsite temporary sign pertaining to the sale of personal property in, at, or upon any residential property or residentially-zoned property, whether such sale be designated as a yard sale, garage sale, lawn sale, home sale, attic sale, moving, sale rummage sale, or any similar designation.

Special exception means * * *

* * *

Sec. 25-4. Severability.

(a) All provisions of this chapter are severable. All provisions of any ordinance hereinafter enacted [which] that [amends or adds] amend or add any provision to this chapter are severable unless such ordinance specifically provides that its provisions are not severable. The finding by a court that some provision of this chapter or any amendment thereof is unconstitutional and void does not affect the validity of the

remaining portions of this chapter unless the court finds that the remaining valid provisions alone are incomplete and incapable of being executed in accordance with the legislative intent of the City.

(b) Without diminishing or limiting in any way the foregoing declaration of severability, it is the express intent of this section that if any provision (including any section, sentence, clause or phrase) of Article XI or any other provision of this chapter pertaining to signs, including but not limited to provisions pertaining to sign permits, is declared by a court of competent jurisdiction to be unconstitutional and void, such declaration of unconstitutionality shall not affect any other provision of Article XI or other provision of this chapter, including but not limited to the prohibition of certain signs and the requirements pertaining to the size, height, location, numbers, illumination, maintenance, construction, and removal of signs. In particular, and without limitation, in the event any provision of Article XI or other provision of this chapter is declared invalid as applied to noncommercial signs, Article XI, or any surviving portions thereof, shall remain in full force and effect as applied to commercial signs.

(c) Without diminishing or limiting in any way the foregoing declaration of severability, it is the express intent of this section that if any provision (including any section, sentence, clause or phrase) of Article XI or any other provision of this chapter pertaining to signs is declared by a court of competent jurisdiction to be unconstitutional and void, such declaration of unconstitutionality shall not affect any other provision of Article XI or other provision of this chapter even if such severability would result in a situation where there would be less speech, whether by subjecting previously exempt signs to the provisions of this chapter or otherwise.

Section 2. That Chapter 25 of the Rockville City Code entitled "Zoning and Planning," Article II entitled "Administration" be amended to add a new Division 5 entitled "Sign Review Board" and a new section 25-81 entitled "Sign Review Board" to read as follows:

Article II. Administration

Division 5. Sign Review Board

Sec. 25-81. Sign Review Board.

(a) *Creation and composition.* There is hereby created and established a board to be called the Sign Review Board, which shall consist of three (3) members and (1) alternate who shall be appointed by the Mayor, subject to the confirmation of the Council, for three (3) year terms. An appointment to fill a vacancy occurring before the expiration of

a term shall be for the remainder of the unexpired term. The Chairperson shall be selected by the Mayor, subject to the confirmation of the Council.

(b) *Qualifications of members.* There will be three (3) members and one (1) alternate member designated to the Sign Review Board. Two (2) members shall be businesspersons operating or associated with businesses in the City. Two (2) members shall be residents of the City who have no vested interest in either any business in the City or in the sign industry. The alternate member will first be a resident of the City; thereafter the alternate position will rotate between a resident appointee and a business appointee.

(c) *Powers and duties.* The Sign Review Board shall exercise the following powers and duties:

(1) *Meetings.* The Board must meet at least once every six weeks at the call of the chairperson, unless there is no business before it. In exercising its powers and duties, not less than two (2) members of the Sign Review Board shall constitute a quorum. The Board shall keep minutes of its proceedings and meetings.

(2) The Board shall

a. Review, at the request of an applicant or the City, an application for a sign permit and make a determination as whether or not the sign as proposed complies with the requirements and purposes of this chapter.

b. Hear and decide applications for modifications from the sign regulations in Article XI of this chapter. The Board may grant modifications from provisions of the sign regulations, with such terms and conditions it deems appropriate, upon the following findings:

(i) That the strict application of the sign regulations would result in peculiar and unusual practical difficulties to, or exceptional or undue hardship upon, the owner of the property or owner of such sign; and

(ii) That the modification is the minimum reasonably necessary to overcome any exceptional conditions; and

(iii) That the modification can be granted without substantial impairment of the intent, purpose, and integrity of the regulations and of this chapter.

c. This section shall not permit the Sign Review Board to grant a modification allowing any sign prohibited under section 25- 461.

(d) *Applications.* A completed application for a sign permit review and/or for a modification from the sign regulations contained in Article XI shall be submitted in writing to the Sign Review Board at least ten (10) calendar days prior to the meeting at

which it is to be considered. Each application shall be submitted on forms provided therefor by the Sign Review Board and be accompanied by such fee as is determined by resolution of the Council. The applicant shall furnish as part of the application such information as may reasonably be required by the Sign Review Board.

(e) *Posting of sign.* Within three (3) business days after the filing of an application for a modification from the sign regulations, the applicant shall erect and maintain a sign on the premises at a location visible to the public or as directed by the Chief of Inspections Services, stating the purpose of the application and the date, time and place of the meeting. Such sign shall be prepared and furnished to the applicant within two (2) business days after the filing of the application. Such sign shall be maintained at all times by the applicant until final action by the Sign Review Board. It shall be unlawful for any person to remove or tamper with any sign erected under this section during the period it is required to be maintained.

(f) A hearing shall be held on a timely filed application at the Board's next scheduled meeting, provided that a different hearing date may be set with the consent of the party filing the application.

(g) *Decisions.*

(1) All actions or decisions of the Board shall be in written form and shall be shall be made within ten (10) business days from the completion of the hearing on the application.

(2) Any decision denying a sign permit review application or a sign modification application shall set forth the reasons for the denial.

(3) A decision granting a modification from the sign requirements may contain such terms and conditions deemed necessary by the Board to satisfy the required findings.

(h) *Appeal.*

(1) Any decision by the Sign Review Board, or the failure of the Sign Review Board to act within the time frames set forth herein, may be appealed by any aggrieved party to the Board of Appeals within 10 business days after the decision is rendered.

(2) Whenever any such appeal is taken, a copy thereof shall be served on the Sign Review Board by the City Clerk, and the Sign Review Board shall promptly give notice of the appeal to all parties to the proceedings before it and shall, within five (5) business days after the filing of the appeal, file with the Board of Appeals the originals or certified copies of all papers and evidence presented to the Sign Review Board in the proceedings before it, together with a copy of its decision and findings, all of which shall be considered as part of the record before the Board of Appeals.

(3) All such appeals shall be *de novo* and shall be considered by the Board of Appeals in the same manner as appeals from determinations of administrative officials as provided for, and in accordance with, State law. The Board of Appeals shall hold a hearing on a timely filed appeal at the Board's next scheduled meeting if practical, but in no event later than forty-five (45) days from the date of the filing of the appeal, provided that a different hearing date may be set with the consent of the party filing the appeal.

(4) The Board of Appeals shall have the power, after notice and hearing, to either affirm the decision of the Sign Review Board or, if it finds such decision is contrary to or inconsistent with the requirements, purposes and intent of this chapter, to reverse, or to remand the case to the Sign Review Board with a written opinion setting forth the reasons for its actions. The Board of Appeals shall render its written opinion within ten (10) business days following the completion of the hearing, provided that the time for rendering a decision may be extended with the consent of the party filing the appeal.

(5) The failure of the Board of Appeals to conduct the hearing or render a written decision within the time frames set forth herein may be appealed to the Circuit Court for the County in the same manner as other appeals from the decisions of the Board of Appeals are taken.

Section 3. That Chapter 25 of the Rockville City Code entitled "Zoning and Planning," Article XI entitled "Signs," be amended to read as follows:

ARTICLE XI. SIGNS

Division 1. General

Sec. 25-456. Legislative findings; [Purpose] purpose and intent.

[In addition to the purposes set forth in section 25-2, the purpose of the requirements set forth in this article which regulate the location, size, placement and certain features of signs is to enable the public to locate goods, services and facilities without difficulty, danger or confusion, to prevent hazards to life and property and to assure the continued attractiveness of the City and the protection of property values.]

(a) The Council finds that signs provide an important medium through which individuals and entities may convey a variety of commercial and noncommercial messages. However, left completely unregulated, signs can become a threat to public safety as a hazard to property, persons, and the motoring public, and a detriment to property values and the overall public welfare as an aesthetic nuisance.

(b) In addition to the purposes set forth in section 25-2 of this chapter, the purpose of the requirements of this article regulating the construction, erection, location, placement,

type, use, design, features, size, number, maintenance, and removal of signs within the City of Rockville is to enable the public to locate goods, services, facilities, and geographic areas without difficulty, danger, or confusion; to reduce traffic and pedestrian hazards and prevent interference with the effectiveness of traffic regulation; to promote the compatibility of signs with the surrounding land uses; to protect the public investment in the roadways in the City; to promote and preserve the economic well-being and vitality of the community; to enhance and improve the environment of the City and protect property values by preventing visual clutter and blight; to preserve the residential character of the City's residential neighborhoods; and to provide effective opportunities for the expression of commercial and noncommercial communication while protecting the public and the community against adverse affects from the unrestricted proliferation of signs.

Sec. 25-457. Exemptions.

(a) This article does not apply to:

(1) Any sign erected inside of any building and not visible from the exterior thereof;

(2) Any sign erected inside of any building and visible outside of such building through a window provided such sign is set back at least ten (10) feet from the nearest window;

(3) Signs inside a building within ten (10) feet of any window not exceeding twenty (20) percent of the area of a window unit:

(4) [Any sign erected on private property in accordance with the Manual on *Uniform Traffic Control Devices* adopted by the City and the State Highway Administration;] Traffic control signs.

(5) Any sign erected by or at the direction of, any governmental body having jurisdiction over the property or right-of-way on which the sign is located;

(6) Any sign [erected by any person as] or portion thereof required to be posted or displayed by this chapter or other applicable Federal, State, or local law or regulation;

(7) [Private flags] One private flag when displayed with the flags of the United States and the State or political subdivision, provided such private flag shall not be larger than the other flags displayed.

(8) Signs located on public or private recreational facilities on parcels of five acres or more, provided that such signs are not intended to be readable from a public way.

(9) Any ornamental flag or stationary structure, device, material or thing of a noncommercial decorative nature extending from a wall or pole located on residential property or around parking or pedestrian areas in the interior of non-residential property and not designed to attract the attention of those traveling on a public way.

(10) Numerals not exceeding eighteen (18) inches in height identifying the address of a dwelling unit or building.

Sec. 25-458. [Sign Review Board.] Construction, design and maintenance of signs.

[(a) *Creation and composition.* There is hereby created and established a board to be called the Sign Review Board, which shall consist of three (3) members and one (1) alternate who shall be appointed by the Mayor, subject to the confirmation of the Council, for three (3) year terms. An appointment to fill a vacancy occurring before the expiration of a term shall be for the remainder of the unexpired term. The Chairperson shall be selected by the Mayor, subject to the confirmation of the Council.

(b) *Qualifications of members.* There will be three (3) members and one (1) alternate designated to the Sign Review Board. Two (2) members shall be business persons operating or associated with businesses in the City. Two (2) members shall be residents of the City who have no vested interest in either any business in the City or in the sign industry. The alternate member of the Board will first be a resident of the City; in future years, the alternate position will rotate between a resident appointee and a business appointee.

(c) *Powers and duties.* The Sign Review Board is authorized, at the request of an applicant, or the City, to review any application for a sign permit and to make a determination as whether or not the sign as proposed complies with the requirements and purposes of this chapter. The Sign Review Board may grant modifications from sign regulations in this article, where the strict application of the sign regulations would result in peculiar and unusual practical difficulties to, or exceptional or undue hardship upon, the owner of the property or owner of such sign; without substantial impairment of the intent, purpose and integrity of the regulations and of this article. This provision shall not permit the Sign Review Board to grant a modification allowing any sign prohibited under section 25- 461, except that the Sign Review Board may grant a modification to freestanding signs as described in section 25-461, paragraph (b)(5). In exercising its powers and duties, not less than two (2) members of the Sign Review Board shall constitute a quorum. The Board shall keep minutes of its proceedings and meetings. All actions or decisions of the Board shall be in written form.

(d) *Sign review application.* An application shall be submitted in writing to the Sign Review Board at least ten (10) days prior to the meeting at which it is to be considered. Each application shall be submitted on forms provided therefor by the Sign Review Board and be accompanied by such fee as is determined by resolution of the Council.

The applicant shall furnish as part of the application such information as may reasonably be required by the Sign Review Board.

(e) *Posting of sign.* Within three (3) business days after the filing of an application for a modification, the applicant shall erect and maintain a sign at the location of the proposed sign, stating the purpose of the application and the date, time and place of the meeting. Such sign shall be prepared and furnished to the applicant within two (2) business days after the filing of the petition. Such sign shall be maintained at all times by the applicant until final action by the Sign Review Board. It shall be unlawful for any person to remove or tamper with any sign erected under this section during the period it is required to be maintained.

(f) *Appeals from decisions.* Any decision by the Sign Review Board may, within ten (10) days after the decision is rendered, be appealed by an interested party to the Board of Appeals, which shall have the power, after notice and hearing, to either affirm the decision of the Sign Review Board or, if it finds such decision is contrary to or inconsistent with the requirements, purposes and intent of this chapter, to reverse, or to remand the case to the Sign Review Board with a written opinion setting forth the reasons for its actions. All such appeals shall be *de novo* and shall be considered by the Board of Appeals in the same manner as appeals from determinations of administrative officials as provided for and in accordance with State law. Whenever any such appeal is taken, a copy thereof shall be served on the Sign Review Board by the City Clerk, and the Sign Review Board shall promptly give notice of the appeal to all parties to the proceedings before it and shall, within five (5) days after the filing of the appeal, file with the Board of Appeals the originals or certified copies of all papers and evidence presented to the Sign Review Board in the proceedings before it, together with a copy of its decision and findings, all of which shall be considered as part of the record before the Board of Appeals.]

(a) Permanent signs must be installed in accordance with the following:

(1) Such signs must be permanently attached to the ground, a building, or another structure by direct attachment to a rigid wall, frame, or structure. Such signs attached to masonry, concrete or steel shall be safely and securely fastened by means of metal anchors, bolts or approved expansion screws of sufficient size and anchorage to safely support the loads applied. Where wood anchors or supports are embedded in the soil, the wood shall be pressure treated with an approved preservative.

(2) Permanent signs shall be designed and constructed to withstand wind pressure as provided for in Chapter 16 of the 2000 International Building Code, as amended, or in such other code adopted as the building code for the City.

(3) *Illumination.* When illumination of a sign is permitted it must satisfy the following requirements:

a. A sign shall not be illuminated by other than electrical means, and electrical devices and wiring shall be installed in accordance with the requirements of the National Electrical Code, as amended, or such other code adopted as the electrical code for the City.

b. Sign illumination must use an enclosed lamp design or indirect lighting from a shielded source in a manner that prevents glare from beyond the property line. No sign shall be illuminated in such a manner as to cause traffic interference.

(b) Temporary signs. A temporary sign must

(1) not be illuminated in any manner.

(2) not be constructed in a manner that requires a building or electrical permit.

(3) not have changeable copy.

(4) be securely anchored to the structure or land in which it is located.

(c) Maintenance. All signs and sign support structures, together with their supports, braces, guys and anchors, shall be maintained in good structural condition, in compliance with all applicable building and electrical codes, and in conformance with this article at all times. The display surfaces of signs shall be kept neatly painted or posted at all times.

Sec. 25-459. Measurement of sign area.

Sign areas shall include the total areas of all permitted signs, except as otherwise provided for herein, and shall be measured as follows:

(1) For sign copy mounted or painted on a background panel or area distinctively painted, textured, lighted or constructed as background for the sign copy, sign area is measured as that area contained within the outside dimensions of the background panel or surface.

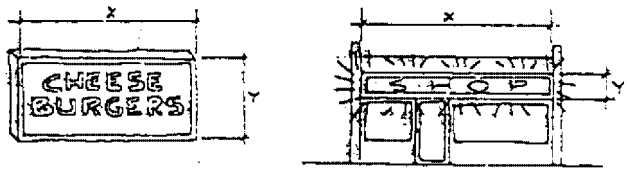

(2) For sign copy mounted as individual letters and/or graphics on an area of a building that has not been painted, textured, lighted or otherwise altered to provide a distinctive background for the sign copy, sign area is measured as the area or the sum of the areas enclosed by the smallest rectangle that will enclose each word and graphic.

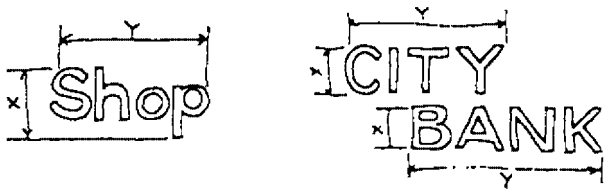

(3) For freestanding signs or projecting signs not more than two (2) sign faces shall be allowed [and if]. If the interior angle between the two (2) sign faces is ninety (90) degrees or less, the area of only one (1) face will be the sign area[; if]. If the angle between the two (2) faces is greater than ninety (90) degrees, the sign area will be the sum of the areas of the two (2) faces.

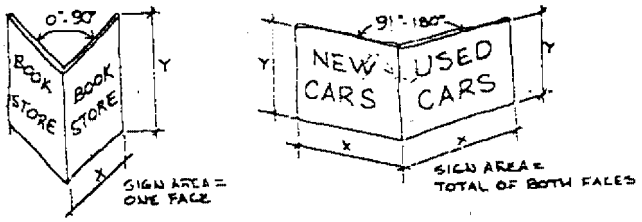

(4) For a freestanding sign, the sign area will be the area that will encompass all components of the sign excluding the supporting structure [which] that does not form part of the sign proper.

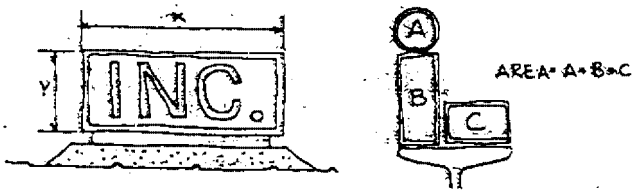

Sec. 25-460. Measurement of sign height.

Sign height shall be the distance from the top of the sign structure to the level of the street upon which the sign faces or to the level of the lot on which the sign is erected, whichever is higher.

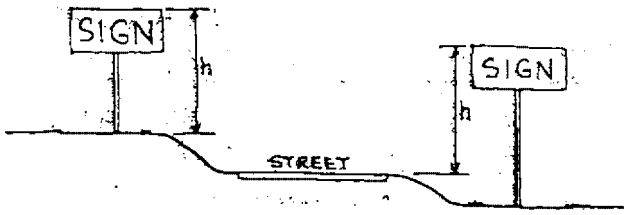

Sec. 25-461. Only permitted signs lawful; signs specifically prohibited.

(a) No sign shall be erected unless such sign is specifically permitted by this article and complies with all of the requirements of this chapter.

(b) [Prohibited signs include, but are not limited to, the following:] The following signs are specifically prohibited:

(1) Signs [which] that impede the operation of any window, door, fire escape, stairway, ladder, or opening required to provide light, air, ingress or egress for any building or structure;

(2) Signs which, by reason of position, size, shape or color, may interfere with, obstruct the view of, or be confused with any traffic sign, signal or device, or which make use of any word, phrase, symbol or character in such a manner as to interfere with, mislead or confuse traffic;

(3) [Signs which contain the name of a building, product, business, service or institution which is not located on the same lot as the sign, except for temporary signs, permanent subdivision identification signs, and political signs erected in accordance with the requirements of this article.] Off-premises signs.

(4) Freestanding signs [which have] in the shape [in the] or form of any person, animal, vegetable, product or animation of any of the foregoing;

(5) [Freestanding signs which have more than twenty (20) percent of the area consisting of a logo or emblem.] Any sign placed or erected on property without the permission of the property owner.

(6) Signs which move or have any moving part, or which give the illusion of motion;

(7) Signs which utilize blinking, flashing, or fluttering illumination or illumination which varies in color or intensity or which create the appearance or illusion of [wiring]

writing or printing [except for signs showing only the date, time and temperature by means of sequentially operated luminaries], including, but not limited to, strobe, rotating beacon, chasing, or zip lights;

(8) Signs erected by any person on any public property or right-of-way except for signs as may be directed by the City Manager;

(9) Signs erected in such a location as to interfere with pedestrian or vehicular circulation onto or off of the property on which it is located;

(10) Portable signs;

(11) Signs mounted, attached or painted on trailers, boats or motor vehicles when used as additional identification or advertising signs on or near the premises;

(12) Signs with changeable [letters] copy, except as provided for herein;

(13) Signs extending above the roof of any building in excess of one (1) percent of the building height;

(14) Flags, banners,[and] pennants, spinners, ribbon, streamers, balloons, and similar devices, except as [provided for herein] expressly permitted by this article;

(15) Signs projecting more than thirty-six (36) inches from a building wall;

(16) Any sign with words, scenes, or graphics of an obscene, indecent, or prurient character which offend public morals or decency.

Sec. 25-462. Sign permits; appeals.

(a) [Signs allowed under this article shall not be erected without prior issuance of a sign permit unless expressly exempted herein.] Except as expressly exempted or otherwise provided in this article, a sign permit must be obtained prior to the installation, erection, enlargement, illumination, or substantial alteration of any permanent or temporary sign allowed under this article. The changing of the sign face is a substantial alteration requiring a new sign permit.

(b) Applications shall be submitted to the [Superintendent of the Division of Licenses and Inspection] Chief of Inspection Services.

(c) Each application shall be submitted on forms provided therefor by the [Superintendent of the Division of Licenses and Inspection] Chief of Inspection Services, and be accompanied by such fee as is [determined] established by resolution of the Council. The applicant shall furnish as part of the application [such information as may reasonably be required by the Superintendent.] the following information:

(1) The street address of the property upon which sign is to be located and a plat map of the property showing the proposed location of the sign and identifying any adjacent residential property; and

(2) The aggregate area for all tenant/business signs erected by or on behalf of the applicant and/or the aggregate area for all signs on the premises; and

(3) The name(s) and address(es) of the owner(s) of the premises upon which the subject sign is to be located; and

(4) Consent of the owner, or the owner's agent, granting permission for the placement or maintenance of the sign; and

(5) Name, address, phone number and business license number of the sign contractor; and

(6) Plans indicating the location of the sign on the property or building wall, including the road frontage or building elevation; and

(7) Plans indicating the dimensions, height, and shape of the sign, and materials, and mounting details; and

(8) Such other information pertaining to the requirements of this article as may reasonably be required by the Chief of Inspection Services.

(d) [A sign permit shall be issued if the Superintendent of the Division of Licenses and Inspection finds that the sign proposed in the application will not:

(1) Affect adversely the health or safety of persons residing or working in the neighborhood of the proposed sign;

(2) Be detrimental to the public welfare or injurious to property or improvements in the neighborhood;

(3) Constitute a violation of any provision of this code or other applicable law.]

The Chief of Inspection Services must review the application within fifteen (15) business days from the date of submission of the application and required fee and either approve or deny the application or return the application to the applicant if the application is incomplete as follows:

(1) A sign permit must be issued if the Chief of Inspection Services finds that the sign proposed in the application complies with the requirements of this article.

(2) If the permit is denied, the denial must be in writing and must specify the specific section or sections of this article or other applicable law with which the proposed sign(s) is inconsistent.

(3) If the application is returned due to incompleteness, the Chief of Inspection Services must advise the applicant in writing as to the information needed to complete the application.

(4) Failure of the Chief of Inspection Services to take action on an application within the time frame set forth above is appealable to the Sign Review Board in the same manner as an appeal from a denial of a permit.

(e) An applicant may appeal the denial of a sign permit by filing a sign permit review application with the Sign Review Board within 10 business days of the decision of the Chief of Inspection Services.

(f) No permit for a sign issued hereunder shall be deemed to constitute permission or authorization to erect or maintain an unlawful sign, nor shall any permit issued hereunder constitute a defense in any action to remove an unlawful sign.

Sec. 25-463. [Removal and alteration of nonconforming] Nonconforming signs.

(a) Whenever an existing sign is altered, it shall be modified to bring it into conformance with this chapter.

(b) Whenever any existing business/tenant erects a new or additional sign, all signs on the premises pertaining to that business/tenant shall be modified to bring them into conformance with this chapter.

(c) Any sign lawfully existing immediately prior to the effective date of this chapter, or any application amendment thereof, but which does not conform to the requirements as now constituted or as it may hereafter be amended from time to time, shall be removed within eight (8) years from the date that the sign became nonconforming.

Sec. 25-464. Removal of [prohibited] signs.

(a) Any prohibited sign found on any public property or right-of-way within the City shall be removed by the City Manager or the City Manager's designate [after reasonable attempt to give notice,] and held for a period of three (3) [working] business days during which time it may be reclaimed by the owner. If the sign is not claimed within that time frame, it shall be deemed to have been abandoned and may be disposed of by the City Manager in the same manner as trash. Nothing herein shall prohibit the imposition of a fine or initiation of any other enforcement action against any person or entity found to have installed a prohibited sign on any public property or right-of-way within the City.

(b) Any sign unlawfully existing immediately prior to the effective date of this chapter, or any applicable amendment thereof, and which does not conform to the requirements of this article, as now constituted or as it may hereafter be amended from time to time, shall be removed by the owner after notice from the City to do so.

(c) Any sign that pertains to an event, activity, or purpose of a limited time or duration must be removed within seven (7) days of the conclusion of the event, activity, or purpose to which it pertains.

(d) An abandoned sign must be removed by its owner or persons otherwise responsible for the sign, or by the owner of the property on which the sign is located, within thirty (30) days from the time the activity on the premises ceases and/or the business or owner vacates the premises. Removal shall consist of the removal of the portion of the sign identifying the business, tenant, entity, service, owner, product, or activity that is no longer located on the premises and installation of a temporary replacement face where applicable.

Sec. 25-465. Signs permitted for residential uses in all zones.

The following signs are permitted for [detached, semidetached, and multifamily dwelling units] residential uses in all zones.

(1) [Street number, residence identification and home occupation sign; provided] Each dwelling unit may have permanent occupant identification signs, including a single sign for a valid home occupation , child care home, or child care center located on a lot under 20,000 square feet, in accordance with the following:

a. The total aggregate of all such signs [shall] must not exceed one hundred fifty (150) square inches;

b. The signs may be a building sign or freestanding;

c. If freestanding, the signs [shall] must not be illuminated in any manner;

d. No sign permit is required.

(2) Permanent [identification] entrance signs for residential developments or [recorded] subdivisions [of] containing ten (10) or more [lots for multifamily developments] dwelling units in accordance with the following

a. One (1) sign not exceeding twenty-four (24) square feet in area with a maximum height of five (5) feet in height located at or near the entrance to the development or subdivision within the boundaries of such development or subdivision;

b. Final location of such sign must be approved by the City Traffic Engineer to ensure that the sign does not obstruct the visibility of motorists.

c. Such sign [shall] must be located in a landscaped area of at least two (2) square feet per each square foot of sign area.

(3) Directional signs for [multifamily developments; provided] residential developments or subdivision of any size in accordance with the following:

a. Such signs [shall] must not exceed three (3) square feet in area;

b. If freestanding, such signs [shall] must not exceed six (6) feet in height;

(4) The following temporary signs:

a. [Sale or rent] Real estate signs for individual [property] residential lots or dwelling units subject to the following:

1. One (1) building or freestanding sign per street frontage not exceeding six (6) square feet in area and, if freestanding, not exceeding five (5) feet in height [pertaining only to the land or building upon which displayed], provided that any sign installed within ten (10) feet from the property line must not exceed forty-two (42) inches in height;

2. Such signs [may] must not be illuminated;

3. No sign permit is required;

b. [Subdivision advertising] Real estate signs for recorded subdivisions [of] containing ten (10) or more lots [and] in accordance with the following:

1. One (1) sign per subdivision not exceeding forty-eight (48) square feet in area and, if freestanding, not exceeding twelve (12) feet in height located within the subdivision;

[2. Two (2) signs per subdivision located off site not exceeding six (6) square feet each and not exceeding eight (8) feet in height;]

[3.] 2. Such signs [may only contain the name of the subdivision advertised and a directional arrow and may] must not be illuminated;

[4.] 3. Such signs may be maintained for a period of two (2) years, or until all the lots in the subdivision are sold, which every occurs first. Sign permits are required and shall be renewable;

c. [Sale, rent or lease] Real estate signs for new or renovated multi-family developments containing up to ten (10) dwelling units[; provided] in accordance with the following:

1. [There is only one] One (1) sign per street frontage not exceeding twelve (12) feet in height located on the property;

2. Such signs [shall] must not be illuminated;

3. No sign permit is required;

d. [Sale, rent or lease] Real estate signs for new or renovated multi-family developments containing more than ten (10) dwelling units in accordance with the following:

1. There is only one (1) sign per street frontage not exceeding forty-eight (48) square feet in area and, if freestanding, not exceeding twelve (12) feet in height located on the property;

[2. There are only two (2) signs per development located off site not exceeding six (6) square feet each and not exceeding eight (8) feet in height;]

[3.] 2. Such signs [may only contain the name of the subdivision advertised and a directional arrow and may] must not be illuminated;

[4.] 3. Such signs may be maintained for a period of two (2) years, or until all the units in the development are rented, sold, or leased which ever occurs first. Sign permits are required and shall be renewable.

e. Temporary noncommercial signs in accordance with the following:

1. Such signs must not exceed an aggregate of twelve (12) square feet per residential lot;

2. If freestanding, such signs must not exceed five (5) feet in height, provided that any sign installed within ten (10) feet from the property line must not exceed 42 inches in height;

3. Temporary yard sale signs must not exceed four square feet in area per sign, must not be displayed for a period longer than two (2) days during any calendar month, and must be removed upon the conclusion of the sale;

4. Such signs must not be illuminated;

5. No sign permit is required.

Sec. 25-466. Signs permitted for nonresidential uses in residential zones.

The following signs are permitted for nonresidential uses in residential zones:

(1) For a church, synagogue or other place of worship and other permitted nonresidential uses in a residential zone, except for child care homes and child care centers located on lots under 20,000 square feet:

a. One (1) permanent sign, not exceeding twenty-four (24) square feet in area for each street frontage;

[b.] 1. If freestanding, it [shall] must not be located less than ten (10) feet from any lot line;

[c.] 2. The sign may contain changeable copy[;].

[d.] b. Directional signs; provided:

1. Such signs do not exceed three (3) square feet in area;

2. If freestanding, such signs [shall] must not exceed six (6) feet in height;

(2) For special exception uses in residential zones:

a. All signs shall be as permitted by the Board of Appeals in its approval of the special exception application, except that the Board of Appeals may not permit any sign prohibited under section 25-461;

b. Residential special exceptions valid on December 31, 1983, may have the following options:

1. One (1) sign not exceeding twenty (20) square feet in area is allowed. It may be a building sign or freestanding, if freestanding, it [shall] must not exceed five (5) feet in height; or

2. Apply to the Board of Appeals in accordance with section 25-339, subsection (c).

(3) Temporary real estate signs, are permitted for all nonresidential uses in residential zones in accordance with the provisions of section 25-465 (4) a.

(4) Temporary noncommercial signs are permitted in accordance with the provisions of section 25-465 (4) e.

Sec. 25- 467. Signs permitted in the O-2 [Zone] and C-T Zones.

The following signs are permitted in the O-2 [Zone] and C-T Zones:

(1) [Building] Permanent building signs in accordance with the following

a. The total area of all building signs [shall] must not exceed fifteen (15) square feet on any building;

b. Such signs [shall] must not utilize internal illumination;

c. Such signs [shall] must not be placed above the first-story level of any building;

(2) [Freestanding identification] Permanent freestanding signs in accordance with the following

a. One (1) freestanding [identification] sign for each record lot or project not exceeding eight (8) square feet in area and not exceeding five (5) feet in height;

b. Such sign [shall] must not utilize internal illumination;

c. Such sign [shall] must be located not less than ten (10) feet from a lot line of any lot used for a residence;

(3) Directional signs:

a. Not to exceed three (3) square feet in area;

b. If freestanding, not to exceed six (6) feet in height;

(4) Temporary signs are permitted in accordance with the following:

a. One (1) [sale, lease, or rent] real estate sign per lot not exceeding twenty-four (24) square feet in area and eight (8) feet in height, in accordance with the following:

1. Such signs [shall] must not be illuminated;

2. Such signs may be maintained for a period of two (2) years or until the building or lot is rented, leased or sold, whichever occurs first;

3. Such signs [shall] must not be located within thirty (30) feet of a residential zone.

b. Temporary noncommercial signs are permitted in accordance with the following:

1. The total aggregate area of all such signs on a single lot must not exceed thirty-two (32) square feet;

2. If freestanding, such signs must not exceed eight (8) feet in height;

3. Such signs must not be illuminated;

4. Such signs must not be located within thirty (30) feet of a residential zone;

5. No single sign may exceed 12 square feet in size.

6. Such signs must not be displayed for more than sixty (60) consecutive days and for not more than a total of sixty (60) days within a calendar year;

7. No sign permit is required.

Sec. 25-468. Signs permitted for uses in C-1, C-2, RPC, I-1, I-2 and I-4 Zones.

The following signs are permitted for uses in the following zones:

(1) [Building] Permanent building signs are permitted in the C-1, C-2, RPC, I-1, I-2 and I-4 zones in accordance with the following:

a. The total aggregate area of all signs on the premises [pertaining to any one (1)] allowed for each business/tenant [shall] must not exceed two (2) square feet for each linear foot of exterior building [frontage] wall enclosing the business/tenant space up to a maximum of fifty (50) square feet. However, if [the] such building [frontage] wall or portion thereof measures more than fifty (50) linear feet, then the aggregate area of all signs on the premises for that business/tenant may be increased in area at the rate of one (1) square foot for each linear foot of exterior building [frontage] wall in excess of fifty (50) linear feet. For [buildings] business/tenant space with multiple [frontages] exterior building walls, each [frontage] exterior wall may be so measured. All signs shall be placed on the exterior building [frontage] wall or portion thereof used for measurement;

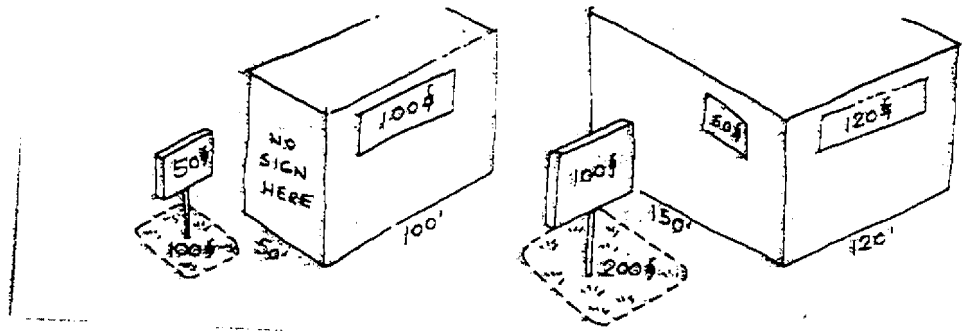

b. For a lot occupied by more than one (1) business/tenant, each building sign [for individual businesses/tenants shall] must be consistent and harmonious in terms of design, color, shape, size, style, material and mounting with all other [such] signs on the building or in the center. A proposal for the entire building or center [shall] must be submitted by the owner prior to the issuance of the first sign permit after the effective date of this article for either a new or existing development;

c. [In addition to the above, buildings] Buildings occupied by four (4) or more businesses/tenants may have [a building identification] one (1) additional building sign with a maximum area of fifty (50) square feet located on an exterior wall;

(2) Freestanding [identification]signs are permitted in the C-2 and RPC Zones in accordance with the following:

a. Freestanding [identification] signs[, which] that identify [an individual] a single business/tenant[,] shall be counted as a portion of the total aggregate sign area [of the premises of] allowed for that business/tenant. [Freestanding identification which] Other freestanding signs, including those that identify a multitenant building or center, shall not be counted in the aggregate sign area [of] allowed for any individual business/tenant. Such signs shall be in accordance with the following:

1. One (1) freestanding [identification] sign for each record lot. On record lots larger than five (5) acres, one (1) freestanding [identification] sign shall be permitted on each street frontage on a major highway or business district street. Where more than one (1) freestanding [identification] sign is permitted, they shall be erected at least one hundred (100) feet apart;

2. Such signs [shall have] must not exceed a maximum area of one hundred (100) square feet and a maximum height of twenty (20) feet[. However], provided that the area of a freestanding sign [shall] must not exceed the [allowable] aggregate sign area [of] allowed for the premises as measured by the most proximate building wall;

3. [For buildings with multiple frontages, the] The freestanding sign shall be counted as a portion of the aggregate sign area of the most proximate exterior building [frontage] wall;

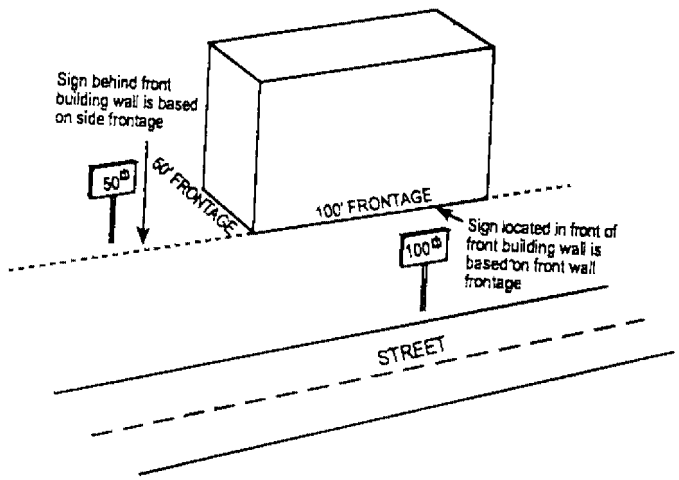

4. Such signs [shall] must not be closer than thirty (30) feet to any residential zone;

5. A landscaped area [shall] must be provided at the base of the freestanding sign, with the landscaped area a minimum area of two (2) square feet for each square foot of sign area;

6. The design of the sign shall be consistent and harmonious with the sign plan and architecture for the entire building or center.

b. Freestanding signs [which] that contain the name, logo or trademark of more than one (1) business, place, organization, building or person [shall] must satisfy the requirements set forth in subsections (2)a.1. through [5] 6. of this section plus the following additional requirements:

1. [Lettering for the individual tenants/businesses shall be not less than ten (10) inches in height.] Lettering for the identification of the building/center must not be less than eighteen (18) inches in height.

2. [Lettering for the building/center shall be not less than eighteen (18) inches in height.] Lettering for the identification of individual businesses/tenants and other copy must not be less than ten (10) inches in height.

3. The design of the sign shall be internally consistent and harmonious in color, size, style, material and mounting.

4. The design of the sign shall be consistent and harmonious with the sign plan and architecture for the entire building or center.

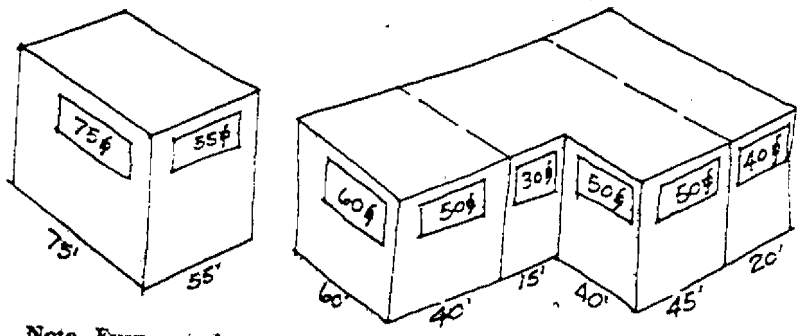

Note—Every exterior surface is "frontage"

(3) Freestanding [identification] signs are permitted in the C-1 Zone [shall be] in accordance with the following:

a. One (1) freestanding [identification] sign per record lot;

b. Such sign [shall have] must not exceed a maximum area of fifty (50) square feet and a maximum height of six (6) feet;

c. Such sign [shall] must not utilize internal illumination;

d. Such sign [shall] must not be located [not less than] within ten (10) feet from any lot line;

e. A landscaped area [shall] must be provided at the base of the freestanding sign, with the landscaped area to be a minimum area of two (2) square feet of sign area;

f. Freestanding [identification] signs [which] that contain the name, logo or trademark of more than one (1) business, place, organization, building, or person [shall] must in addition satisfy the additional requirements set forth in subsection (2)b. of this section.

(4) In the I-1, I-2, and I-4 Zones freestanding [identification] signs[, which] that identify [an individual] a single business/tenant shall be counted as a portion of the total aggregate sign area [of the premises of] allowed for that business/tenant. [Freestanding identification signs which] Other freestanding signs, including those that identify a multi-tenant building or center, shall not be counted in the aggregate sign area [of] allowed for any individual business/tenant. Such signs shall be in accordance with the following:

a. There shall be only one (1) freestanding [identification] sign per record lot;

b. Such signs [shall] must have a maximum area of fifty (50) square feet and a maximum height of ten (10) feet;

c. [For buildings with multiple frontages, the] The freestanding sign shall be counted as a portion of the aggregate sign area of the most proximate exterior building [frontage] wall;

d. Such signs [shall] must not be closer than thirty (30) feet to any residential zone;

e. Freestanding [identification] signs [which] that contain the name, logo or trademark of that more than one (1) business, place, organization, building, or person [shall] must in addition satisfy the additional requirements set forth in subsection (2)b. of this section.

(5) [Directory] Additional signs in the C-1, C-2, RPC, I-1, I-2 and 1-4 zones. Buildings or centers occupied by four (4) or more businesses/tenants may have one (1) [directory] additional sign, with one (1) entry per business/tenant. Letters shall be a maximum height of three (3) inches and [shall] must be consistent in style. Such sign may be erected as a building sign or freestanding sign not intended to be readable from a public way. If freestanding, such sign [shall have] must not exceed a maximum of fifty (50) square feet in area and a maximum height of ten (10) feet;

(6) Directional signs in the C-1, C-2, RPC, I-1, I-2, and I-4 zones not to exceed three (3) square feet in area. If freestanding, they [shall] must not exceed six (6) feet in height;

(7) [Price signs in] In the C-1, C-2, RPC, I-1, I-2 and I-4 zones gasoline price signs required by State law for automobile filling stations may be freestanding or erected as a building sign. [only in accordance with the following:

a. Gasoline price information shall be posted in accordance with the minimum requirements of State law.] Any such sign or portion thereof that exceeds the minimum requirements of State law shall be counted in the number, size and total aggregate area for the business/tenant[;].

[b. Changeable copy will be allowed regarding gasoline price only;

c. Such sign may be freestanding or erected as a building sign;]

(8) Changeable [message] copy signs are permitted in the C-1, C-2, RPC, I-1, I-2 and I-4 zones to announce current and future entertainment productions. [in accordance with the following:

a. The sign shall be either:

1. A sign for theatre or entertainment establishment for the sole purpose of identifying the name, case, time and date of present and future motion pictures or other entertainment productions; or

2. A sign for a shopping mall or arcade having at least one hundred thousand (100,000) square feet of gross floor area and having at least ten (10) separate uses not visible from adjoining streets to announce current and future events;

b.] Such sign may be freestanding and shall be counted in the number, size and aggregate sign area permitted for the business/tenant;

(9) Temporary signs are permitted in the C-1, C-2, RPC, I-1, I-2 and 1-4 zones in accordance with the following:

a. [A sale, lease, or rent sign, one] One (1) real estate sign per lot not exceeding forty-eight (48) square feet in area, and not more than twelve (12) feet in height if freestanding, or one (1) building sign not exceeding seventy-two (72) square feet in area if mounted at least seventy (70) feet above adjacent grade, in accordance with the following:

1. Such signs [shall] must not be illuminated;

2. Such signs may be maintained for a period of two (2) years or until the building or lot is rented, leased or sold, whichever occurs first. Signs must be removed within thirty (30) days after sale, lease or rental. [The Sign Review Board may permit the issuance of a subsequent permit for such sign, as long as space in the building remains for lease or rent, or the building is for sale.] Signs installed for a two (2) year renewal period are limited to a maximum size of twenty-four (24) square feet [and must be approved by the Sign Review Board for design and location. A sixty (60) day waiting period is required between the removal of a sign whose permit has expired and the installation of the approved renewal sign];

3. Such signs [shall] must not be located within thirty (30) feet of a residential zone;

b. One (1) sign may be erected during the period of construction [identifying the contractor, architect, lending institution, etc.] with a total maximum sign area of seventy-two (72) square feet;

c. [Grand opening banners] Upon occupancy of a space by a business or tenant, banners, pennants and displays not exceeding thirty-two (32) square feet in total area may be erected for up to sixty (60) consecutive days including days before or after actual occupancy date by the business or tenant.

d. Temporary noncommercial signs are permitted in the C-1, C-2, RPC, I-1, I-2 and 1-4 zones in accordance with the provisions of section 25-467 (4) b.

(10) Subdivision [identification] entrance signs. In the I-1, I-2, and I-4 Zones, permanent [identification] signs within recorded subdivisions of four (4) or more lots in accordance with the following:

a. One (1) sign not exceeding fifty (50) square feet in area and not exceeding six (6) feet in height.

b. Such sign must be located at or near the entrance to the subdivision within the boundaries of the subdivision. Final location of such sign [to] must be approved by the City Traffic Engineer to ensure that the sign does not obstruct the visibility of motorists.

c. Such sign [shall] must be located in a landscaped area of at least two (2) square feet per each square foot of sign area.

d. Such sign [shall] must not utilize internal illumination.

Sec. 25-469. Signs permitted for uses in the O-3 and I-3 Zones.

The following signs are permitted in O-3 and I-3 Zones:

(1) Building signs, in accordance with the following:

a. The total area of all signs erected on a record lot in a O-3 and I-3 Zones [shall] must not exceed two hundred fifty (250) square feet;

b. For a lot occupied by more than one (1) business/tenant, each building sign [for individual businesses/tenants] shall be consistent and harmonious in terms of design, color, shape, size, style, material and mounting with all other such signs on the building or in the center. A proposal for signage for the entire building or center [shall] must be submitted prior to the issuance of the first sign permit for either a new or existing development;

(2) Freestanding [identification] signs. Freestanding [identification] signs shall be counted as a portion of the total aggregate sign area of the lot, and [shall] must be in accordance with the following:

a. One (1) freestanding [identification] sign for each record lot not exceeding one hundred (100) square feet in area and not exceeding twenty (20) feet in height is allowed. Such sign [shall] must be located not less than fifty (50) feet from any lot line;

b. In addition, record lots which abut a limited access highway shall be permitted one (1) additional freestanding [identification] sign not exceeding fifty (50) square feet in area and not exceeding five (5) feet in height to be located at the principal point of ingress to such lot and not less than ten (10) feet from any lot line;

c. A landscaped area [shall] must be provided at the base of the freestanding sign. The landscaped area [shall] must be a minimum area of two (2) square feet for each square foot of sign area;

d. [Freestanding signs may identify up to four (4) individual tenants per sign, using a maximum of six (6) inch high letters or graphics for tenant names.] Letters and graphics on such signs must not exceed six (6) inches in height.

(3) Directional signs not to exceed three (3) square feet in area. If freestanding, they shall not exceed six (6) feet in height.

(4) Temporary signs shall be permitted in accordance with the following:

a. [Sale, lease, or rent] Real estate signs, one (1) sign per lot not exceeding forty-eight (48) square feet in area, and not more than twelve (12) feet in height if freestanding, or one (1) building sign not exceeding seventy-two (72) square feet in area if mounted at least seventy (70) feet above grade in accordance with the following:

1. Such signs [shall] must not be illuminated;

2. Such signs may be maintained for a period of two (2) years or until the building or lot is rented, leased or sold, whichever occurs first. Signs must be removed within thirty (30) days after sale, lease or rental. [The Sign Review Board may permit the issuance of a subsequent permit for such sign, as long as space in the building remains for lease or rent, or the building is for sale.] Signs installed for a two (2) year renewal period are limited to a maximum size of twenty-four (24) square feet [and must be approved by the Sign Review Board for design and location. A sixty (60) day waiting period is required between the removal of a sign whose permit has expired and the installation of the approved renewal sign];

3. Such signs [shall] must not be located within thirty (30) feet of a residential zone;

4. Lots abutting a limited access highway may have a second real estate sign;

b. One (1) sign may be erected during the period of construction [identifying the contractor, architect, lending institution,] with a total maximum sign area of seventy-two (72) square feet;

c. Temporary noncommercial signs are permitted in accordance with the provisions of section 25-467 (4) b.

(5) Subdivision [identification] entrance signs. Permanent [identification] signs within a recorded subdivisions of four (4) or more lots in accordance with the following:

a. One sign not exceeding fifty (50) square feet in area and not exceeding six (6) feet in height.

b. Such sign must be located at or near the entrance of the subdivision within the boundaries of the subdivision. Final location of such sign [to] must be approved by the City Traffic Engineer to ensure that the sign does not obstruct the visibility of motorists.

c. Such sign [shall] must be located in a landscaped area of at least two (2) square feet per each square foot of sign area.

d. Such sign [shall] must not utilize internal illumination.

Sec. 25-470. Signs permitted for all uses in the in TCO-1, TCO-2, TCM-1, TCM-2, O-1 and RPR Zones.

The following signs are permitted for all uses in the TCO-1, TCO-2, TCM-1, TCM-2, O-1 and RPR zones in accordance with the following:

(1) Building signs in accordance with the following:

a. The total aggregate area of all signs on the premises [pertaining to any one (1)] allowed for each business/tenant [shall] must not exceed two (2) square feet for each linear foot of exterior building [frontage] wall enclosing a business/tenant space up to a maximum of fifty (50) square feet. However, if [the] building [frontage] wall or portion thereof measures more than fifty (50) feet, then the aggregate area of all signs on the premises allowed for that business/tenant may be increased in area at the rate of one (1) square foot for each linear foot of exterior building [frontage] wall in excess of fifty (50) linear feet;

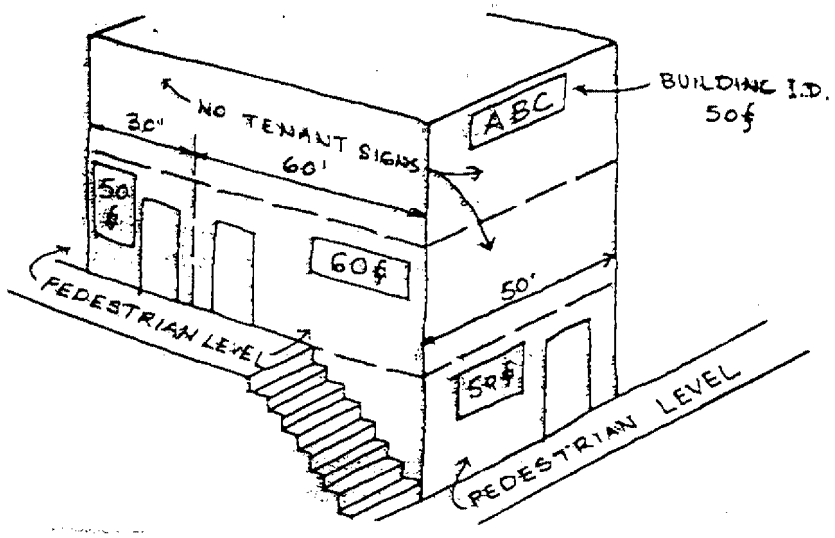

b. For a lot occupied by more than one (1) business/tenant, each building sign [for individual businesses/tenants shall] must be consistent and harmonious in terms of design, color, shape, size, style, material and mounting with all other such signs on the building or in the center. A proposal for the entire building or center [shall] must be submitted by the owner prior to the issuance of the first sign permit for either a new or existing development;

c. Signs allowed for an individual business/tenant in a multi-tenant building [shall] must be placed only on pedestrian levels of the building;

d. In addition to the above, buildings occupied by two (2) or more businesses/tenants may have building [identification] signs with a maximum area of fifty (50) square feet each located on any exterior wall that has frontage on the public right-of-way;

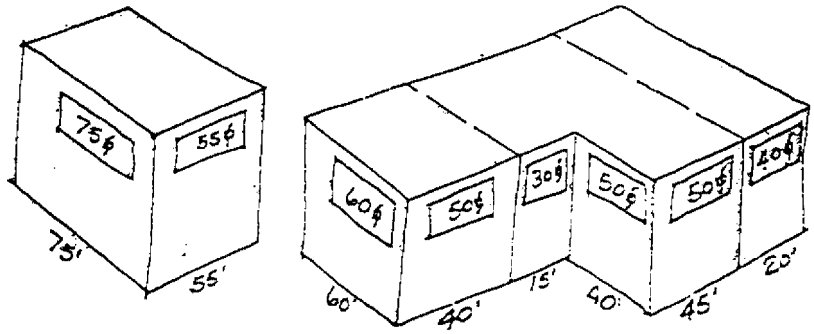

NOTE: EVERY EXTERIOR SURFACE IS "FRONTAGE"

(2) Freestanding [identification] signs. In the TCO-2, TCM-1, TCM-2 and O-1 Zones, one (1) freestanding nonilluminated monument sign per lot, not exceeding three (3) feet by eight (8) inches in size. The sign [shall] must not exceed six (6) feet in height and must not have a separate supporting structure. Letters or graphics [shall] must not

exceed six (6) inches in height. [Such signs may identify more than 1 (one) tenant.] Final location of such sign shall be approved by the City Traffic Engineer to ensure motorist visibility.

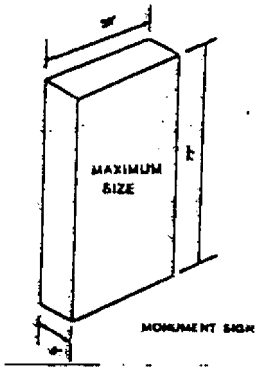

(3) Directional signs not to exceed three (3) square feet in area. If freestanding they [shall] must not exceed six (6) feet in height;

(4) [Price signs] Gasoline price signs required by State law for automobile filling stations may be freestanding or erected as a building sign. [only in accordance with the following:

a. Gasoline price information shall be posted in accordance with the minimum requirements of State law.] Any such sign or portion thereof that exceeds the minimum requirements of State law shall be counted in the number, size and total aggregate area for the business;

[b. Changeable copy will be allowed regarding gasoline price only;

c. Such sign may be freestanding or erected as a building sign;]

(5) Changeable [message] copy signs. Changeable [message] copy signs [shall be] are allowed to announce current and future entertainment productions; [in accordance with the following:

a. The sign shall be either:

1. A sign for theatre or entertainment establishment for the sole purpose of identifying the name, cast, time and date of present and future motion pictures or other entertainment productions; or

2. A sign for a shopping mall or arcade having at least one hundred thousand (100,000) square feet of gross floor area and having at least ten (10) separate uses not visible from adjoining streets, for the sole purpose of announcing current and future events;

b.] Such sign may be freestanding and shall be counted in the number, size and aggregate sign area allowed for the business/tenant;

(6) Temporary signs [shall be] are permitted in accordance with the following:

a. One (1) [sale, lease, or rent sign] real estate sign per lot not exceeding forty-eight (48) square feet in area, and not more than twelve (12) feet in height if freestanding, or one (1) building sign not exceeding seventy-two (72) square feet in area if mounted at least seventy (70) feet above adjacent grade, is allowed in accordance with the following:

1. Such signs [shall] must not be illuminated;

2. Such signs may be maintained for a period of two (2) years or until the building or lot is rented, leased or sold, whichever occurs first. Signs must be removed within thirty (30) days after sale, lease or rental. [The Sign Review Board may permit the issuance of a subsequent permit for such sign, as long as space in the building remains for lease or rent, or the building is for sale.] Signs installed for a two (2) year renewal period are limited to a maximum size of twenty-four (24) square feet [and must be approved by the Sign Review Board for design and location. A sixty (60) day waiting period is required between the removal of a sign whose permit has expired and the installation of the approved renewal sign];

3. Such signs [shall] must not be located within thirty (30) feet of a residential zone;

b. One (1) sign may be erected during the period of construction [identifying the contractor, architect, lending institution] with a total maximum sign area of seventy-two (72) square feet;

c. [Grand opening banners] Upon occupancy of a space by a business or tenant, banners, pennants and displays not exceeding thirty-two (32) square feet in total area may be erected for up to for up to sixty (60) consecutive days including days before or after actual occupancy date by the business or tenant.

d. Temporary noncommercial signs are permitted in the TCO-1, TCO-2, TCM-1, TCM-2, O-1 and RPR Zones in accordance with the provisions of section 25-467 (4) b.

Sec. 25-471. [Political] Election signs.

[Political] Election signs [shall be] are permitted in accordance with the following:

(1) In residential zones and on residential property in all zones, such signs [may not exceed a total of nine (9) square feet] must comply with the size, area, height, and location requirements for temporary noncommercial signs contained in sections 25-465 (4) e. Such signs [shall be located] are subject to applicable provisions of [subsection (a) of] section 25-461. No sign permit is required;

(2) In all other zones, such signs [may not exceed a total of thirty-two (32) square feet in area and eight (8) feet in height] must comply with the requirements of the zone in which it is located pertaining to the size, area, height, duration, and location requirements for temporary noncommercial signs. Such signs [shall be located] are subject to applicable provisions of [subsection (a) of] section 25-461. No sign permit is required [except for campaign headquarters identification signs];

(3) [Political signs may be erected only for a period beginning thirty (30) days prior to the election to which they pertain and ending] Election signs must be removed within seven (7) days after [such] the election to which they pertain[; provided that where a general election follows a primary election within seventy-five (75) days, a sign relating to a candidate who is either nominated in the primary or running unopposed may remain in place during the period between the primary and the general election]. It shall be the obligation of the candidate to cause all such signs to be removed prior to the expiration of the period.

(4) [Political] Election signs [may] must not be illuminated.

(5) Nothing herein shall preclude the usage at any time of permanent signage permitted under this chapter to advocate a candidate or issue to be voted on in an election.

Section 25-472. Signs on public property and the public right-of-way.

(a) No sign is permitted on public property or within the public right-of-way except as directed or authorized by the City Manager.

(b) The City Manager may direct or authorize the erection of the following signs on public property or within the public right-of-way:

(1) Traffic control signs.

(2) Signs that provide directional or other public service information.

(3) Signs pertaining to a governmental or public purpose.

(4) Signs pertaining to the use, maintenance, and/or operation of public property or right-of-way and/or pertaining to any events or activities lawfully conducted on said property or right-of-way.

(5) Signs pertaining to the closure or partial closure of a road or other public right-of-way.

(6) Such other signs deemed to be in the public interest.

(c) The City Manager may designate one or more areas on public property or within the public right-of-way for the erection of signs pertaining to publicly and/or privately sponsored community events and noncommercial messages. Such signs shall be erected and maintained in accordance with such standards, requirements, and conditions as may be established by the City Manager.

Sec. 25-473. Noncommercial signs permitted in lieu of commercial signs.

Notwithstanding any provision of this article or chapter to the contrary, any sign permitted by this article or chapter to contain a commercial message, may in lieu thereof contain a noncommercial message unrelated to the business, tenant, or entity located on the premises where the sign is erected, provided that the other criteria and regulations contained in this article and chapter have been satisfied, including but not limited to size, height, setback, location, duration, design, maintenance, and construction regulations and criteria.

Note: Underlining indicates language added
[Brackets] indicate material deleted
Asterisks *** indicate material not changed by this ordinance

* * * * * * * * * * * * * * * * * *

I hereby certify that the foregoing is a true and correct copy

of an Ordinance adopted by the Mayor and Council at its

meeting of

_____
Claire F. Funkhouser, CMC, City Clerk